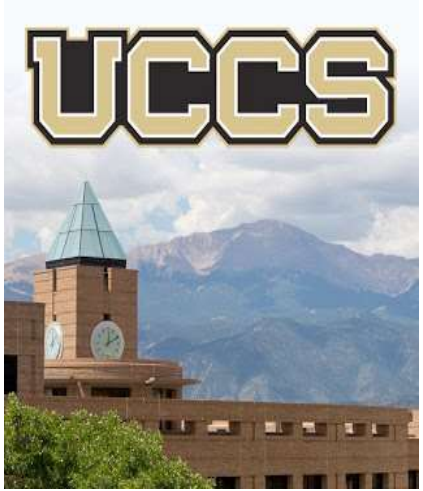

Unit 01.02.03
CS 5220:
COMPUTER COMMUNICATIONS

TCP/IP: Architecture and Routing Example

XIAOBO ZHOU, Ph.D.

Professor, Department of Computer Science

TCP/IP Protocol Suite

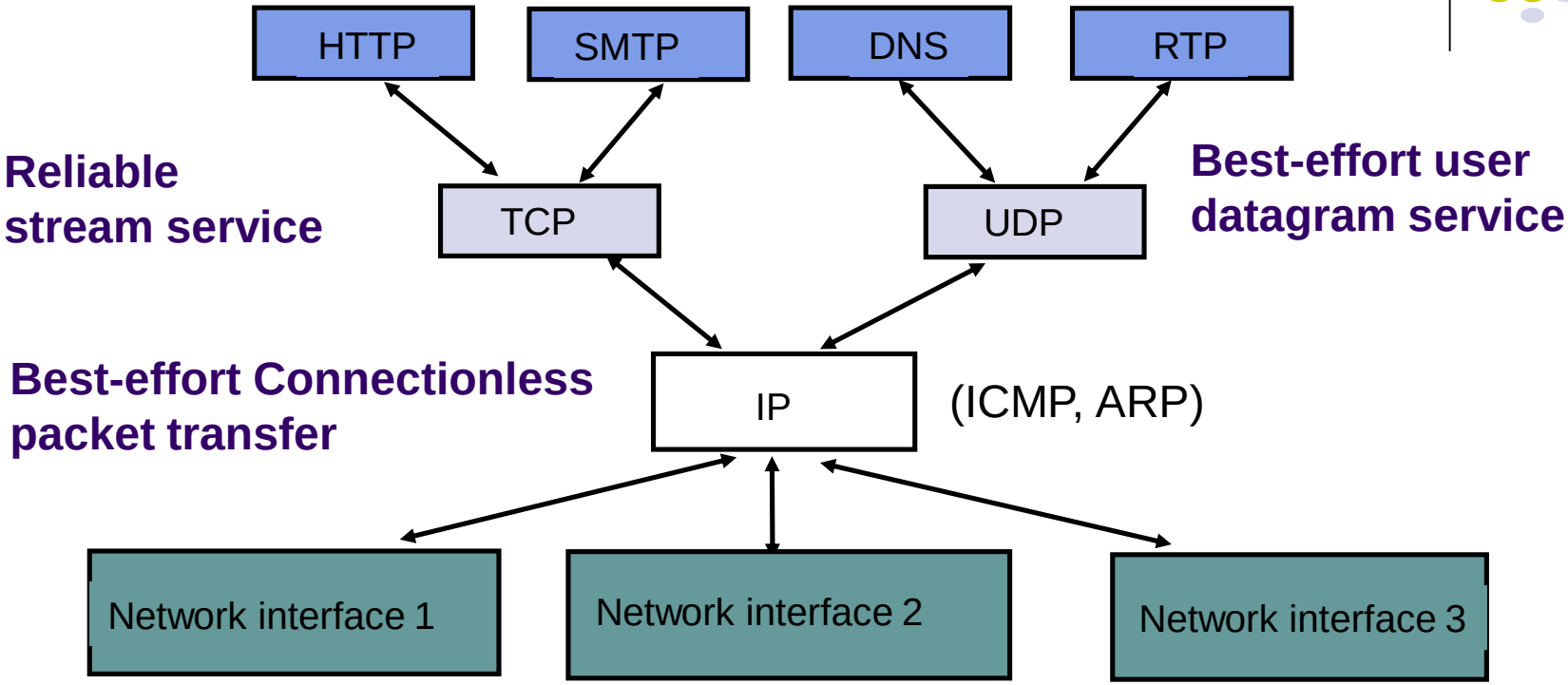

Internet Protocol (IP)

- *Routers (gateways)* interconnect different networks
- Host computers prepare IP packets and transmit them over their attached network
- Routers forward IP packets across networks
- *Best-effort* IP transfer service

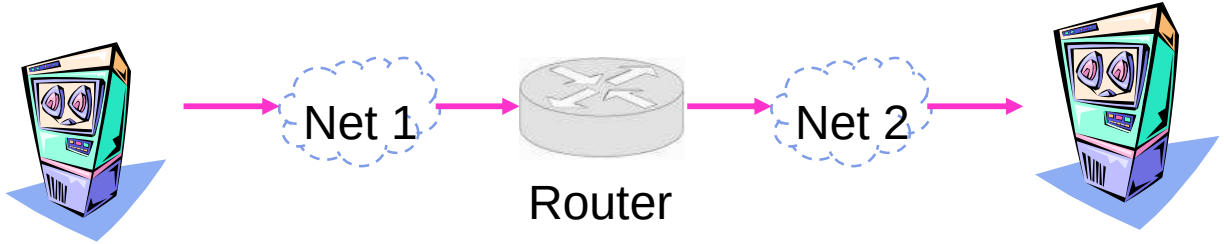

Internet Addresses

- Hierarchical address: Net ID + Host ID
- IP packets routed according to Net ID
- Routers compute routing tables using distributed algorithm

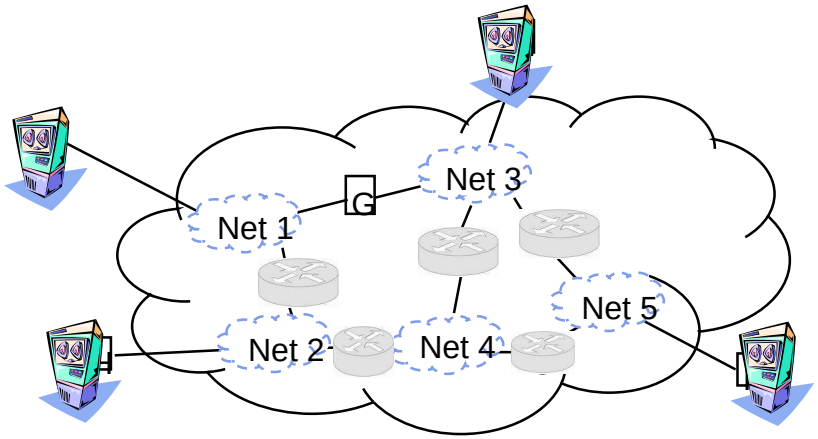

Physical Addresses

- LANs assign physical addresses to physical attachment to the network
- The network uses its own address to transfer packets or frames to the appropriate destination
- IP address needs to be resolved to physical address at each IP network interface, by address resolution protocol (ARP)
- Example: Ethernet uses 48-bit addresses
  - Each NIC has globally unique physical address (called MAC address)
  - First 24 bits identify NIC manufacturer; second 24 bits are serial number

Example

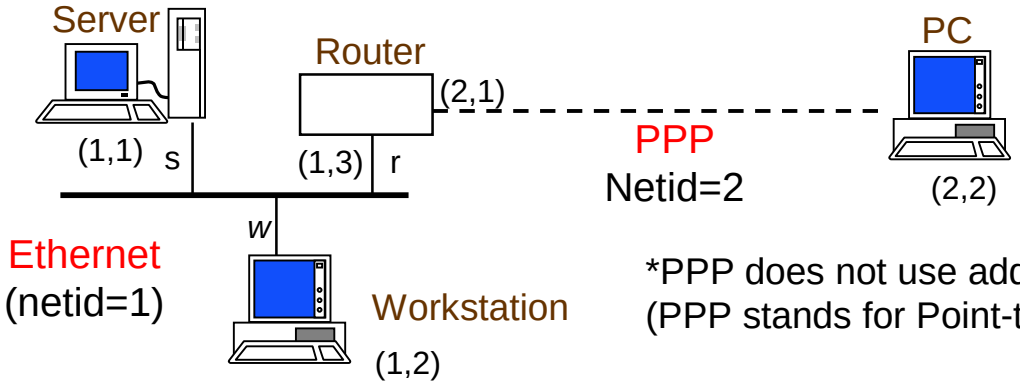

*PPP does not use addresses
(PPP stands for Point-to-Point)

	netid	hostid	Physical address
server	1	1	s
workstation	1	2	w
router	1	3	r
router	2	1	-
PC	2	2	-

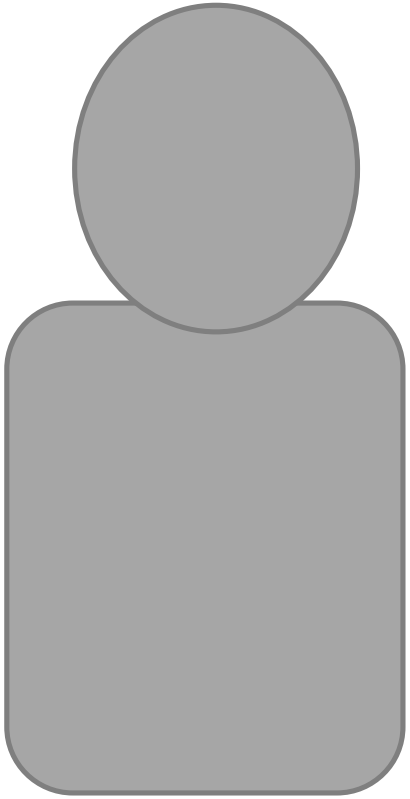

Encapsulation

- Ethernet header contains:
  - source and destination physical addresses
  - network protocol type (e.g. IP)

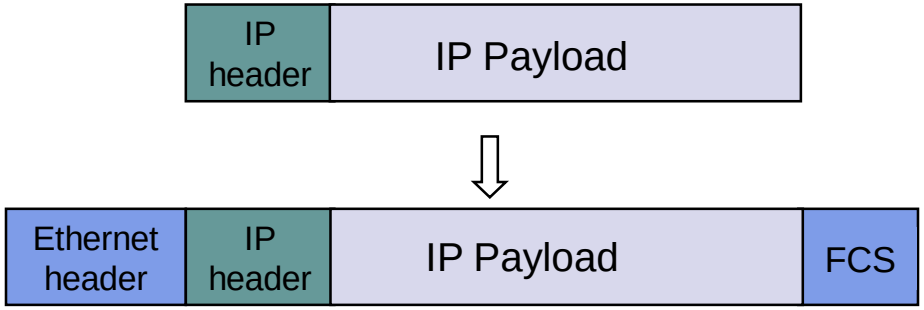

Example: IP packet from workstation to server

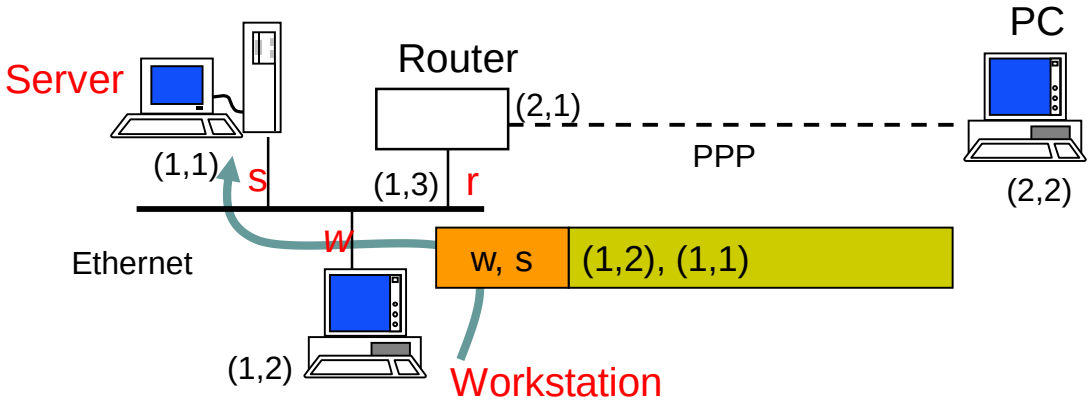

1. IP packet has (1,2) IP address for source and (1,1) IP address for destination
2. IP table at workstation indicates (1,1) connected to same network, so IP packet is encapsulated in Ethernet frame with addresses w and s
3. Ethernet frame is broadcast by workstation NIC and captured by server NIC
4. NIC examines protocol type field and then delivers packet to its IP layer

Example: IP packet from server to PC

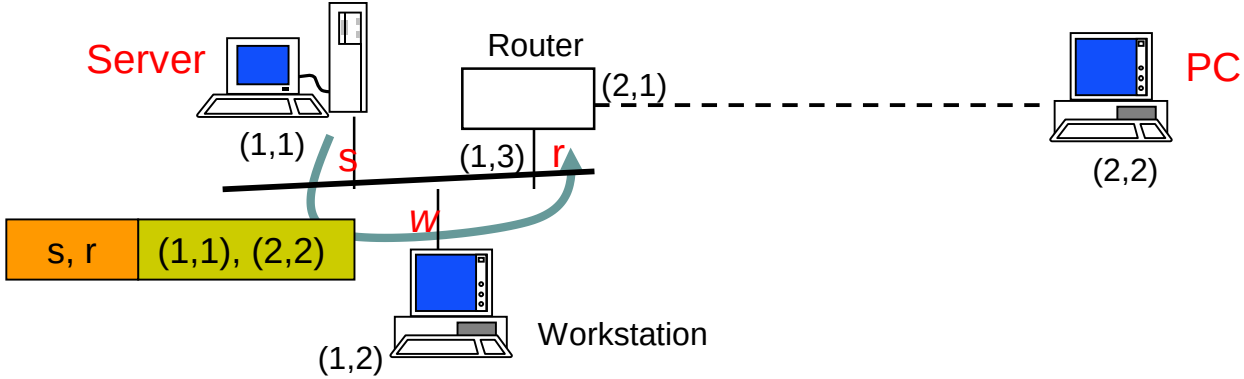

1. IP packet has (1,1) and (2,2) as IP source and destination addresses
2. IP table at server indicates packet should be sent to router, so IP packet is encapsulated in Ethernet frame with addresses s and r
3. Ethernet frame is broadcast by server NIC and captured by router NIC

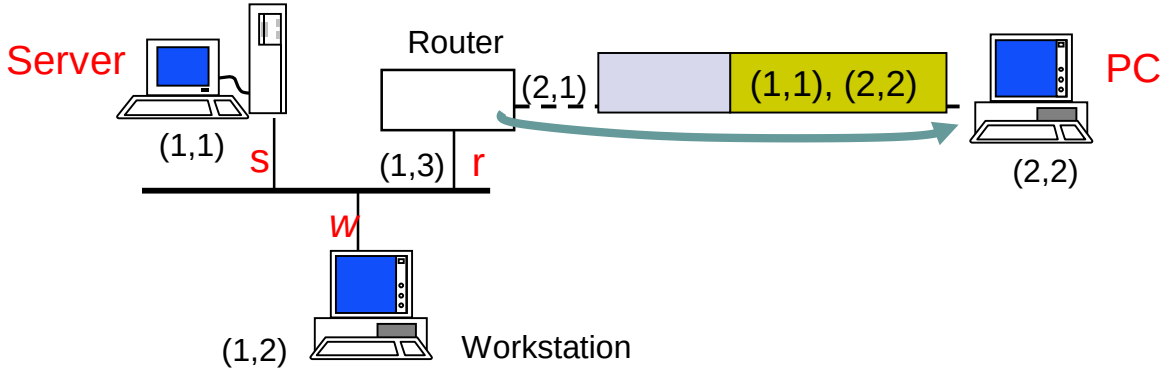

4. Router NIC examines protocol type field and delivers packet to its IP layer
5. IP layer examines IP packet destination address and determines IP packet should be routed to (2,2)
6. Router's table indicates (2,2) is directly connected via PPP link
7. IP packet is encapsulated in PPP frame and delivered to PC
8. PPP at PC examines protocol type field and delivers packet to PC IP layer

Lesson Summary

- Encapsulation is key to layering
- Layers work together for routing